Pinn | 12405CLBKSBR

Job Name:_____ Job Type:_____ Quantity:_____ Comments:_____

PRODUCT DESCRIPTION

Simple clear glass cylinders are secured by decorative thumb screws in this transitional collection of sconces and pendants both neutral in design and suitable for damp applications. Choose from Satin Nickel or a two-tone Black and Satin Brass finish to pair with popular interior finishes in hardware, plumbing and decor.

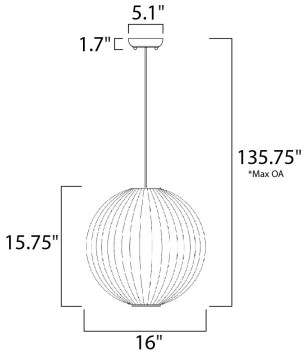

*max overall height

MEASUREMENTS

DIMENSION	: 39" W x 8.25" H x 5.5" Ext
BACK PLATE	: 4.75" W x 4.75" H x 2.25" HCO
HANGING WEIGHT	: 6.42 lb

LAMPING

INPUT VOLTAGE	: 120V
BULB	: 5 x 60W Incandescent E26 Medium , 300W Total
BULB INCLUDED	: (Not Included)

FINISHES OPTION

Black / Satin Brass

Satin Nickel

GLASS

Clear CL

MATERIAL

Steel, Glass

RATINGS

Damp Location

ADDITIONAL

INSTALL UP/DOWN: Up/Down
OPERATING TEMPERATURE:
-20°C (-4°F), 40°C (104°F)

Always consult a qualified electrician before installing any lighting product.

MAXIM® LIGHTING

WESTERN DISTRIBUTION CENTER (HEADQUARTER)
253 NORTH VINELAND AVE I CITY OF INDUSTRY, CA 91746

EASTERN DISTRIBUTION CENTER
101 GARDNER PARK | PEACHTREE CITY, GA 30269

P. 626.956.4200 I F. 626.956.4225 I maximlighting.com